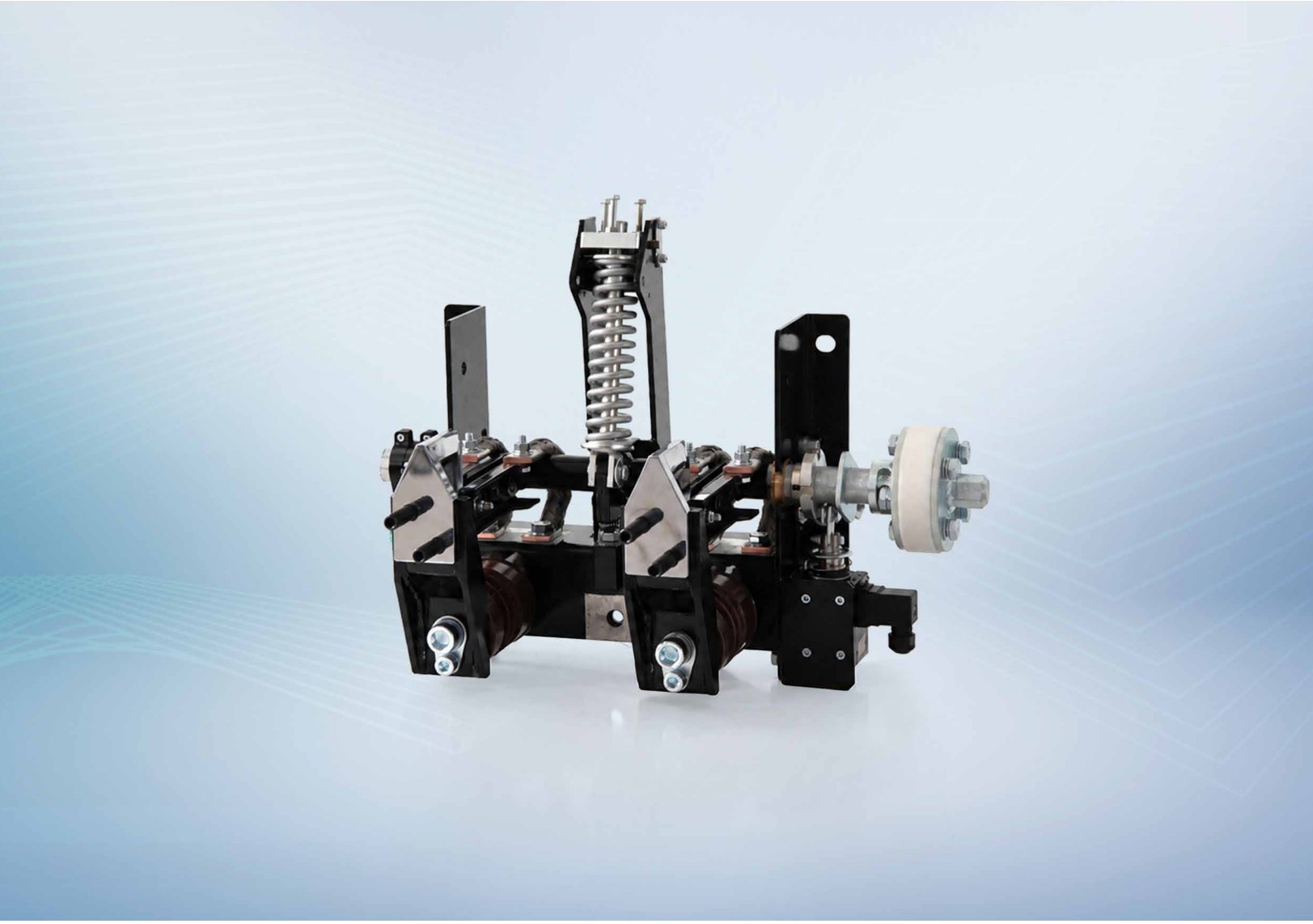

EARTHING SWITCHES ES-125-3,3

CITY ELECTRIC TRANSPORT ■
RAILWAYS ■ METRO

EARTHING SWITCHES ES-125-3,3

- Reliability and safety
- Enhanced making capacity and short-circuit withstand
- Simplicity of design and ease of operation
- Long service life

3600 V DC	115 kA	Category V	5000
Operating voltage	Peak short-circuit current	Making capacity	Switching endurance

APPLICATION

Traction substations 600 ... 3300 V DC

ADVANTAGES OF EARTHING SWITCHES ES-125-3,3

The earthing switch is designed to earth a de-energized section of electrical circuit to ensure personnel safety during maintenance work.

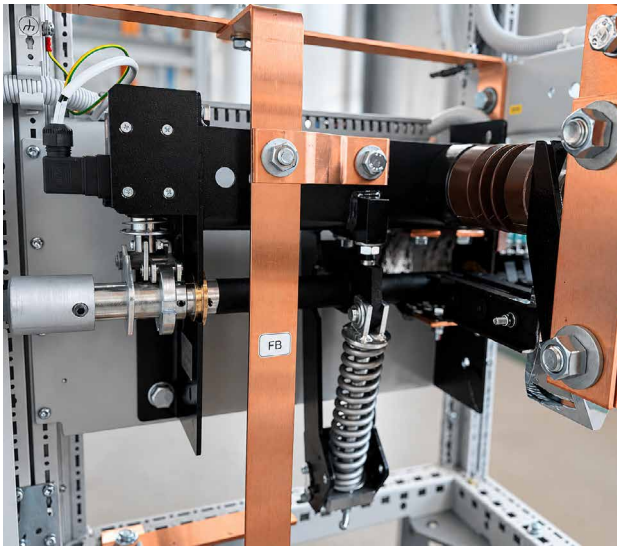

Reliable design

The earthing switch has a simple design without complex electronics, ensuring high reliability and durability.

Safe earthing

The built-in mechanical interlock prevents earthing of live current-carrying parts, and helps to avoid incorrect operations and improve personnel safety.

Short-circuit withstand

The earthing switch has an increased making capacity and ensures resistance to high currents in case of accidental closing due to short-circuit current.

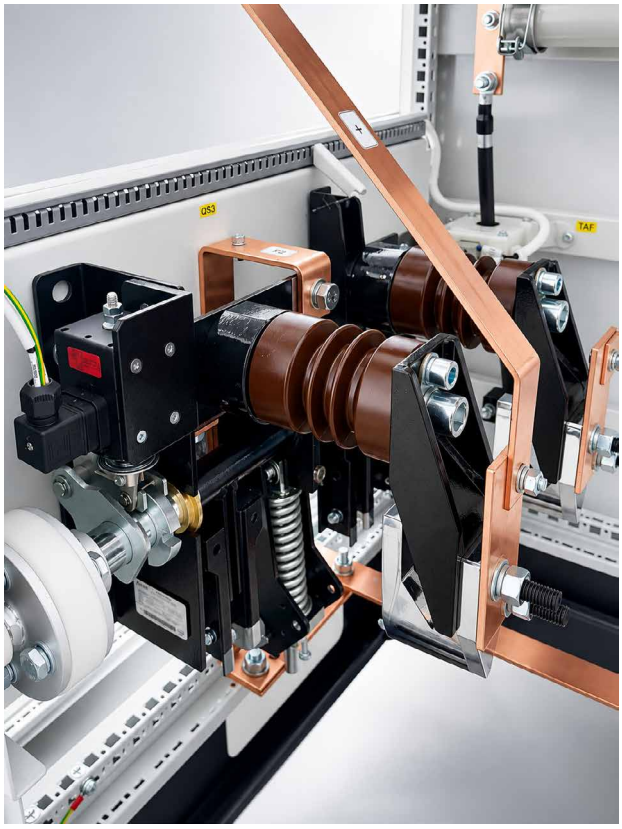

Easy maintenance

The simple design facilitates scheduled maintenance, reduces the servicing time and minimizes operating costs.

Long service life

A robust design and reliable contact system ensure stable operation of the earthing switch for a long period under traction substation conditions.

Compliance with international standards

The earthing switch is designed in accordance with the requirements of international and European standards:

- EN 50123-1:2003/A1:2013
- EN 50123-3:2003/A1:2013
- IEC 61992-1
- IEC 61992-3
- DSTU EN 50124-1:2018 (EN 50124-
- 1:2017, IDT).

ADVANTAGES OF EARTHING SWITCHES ES-125-3,3

Electromagnetic interlock

The earthing switch electromagnetic interlock prevents incorrect switching operations by personnel and helps to avoid fault conditions that could damage the electrical equipment.

The electromagnet rod is connected to a lever that blocks the drive shaft and prevents it from rotating.

The earthing switch is switched from one position to another manually by means of the operating handle.

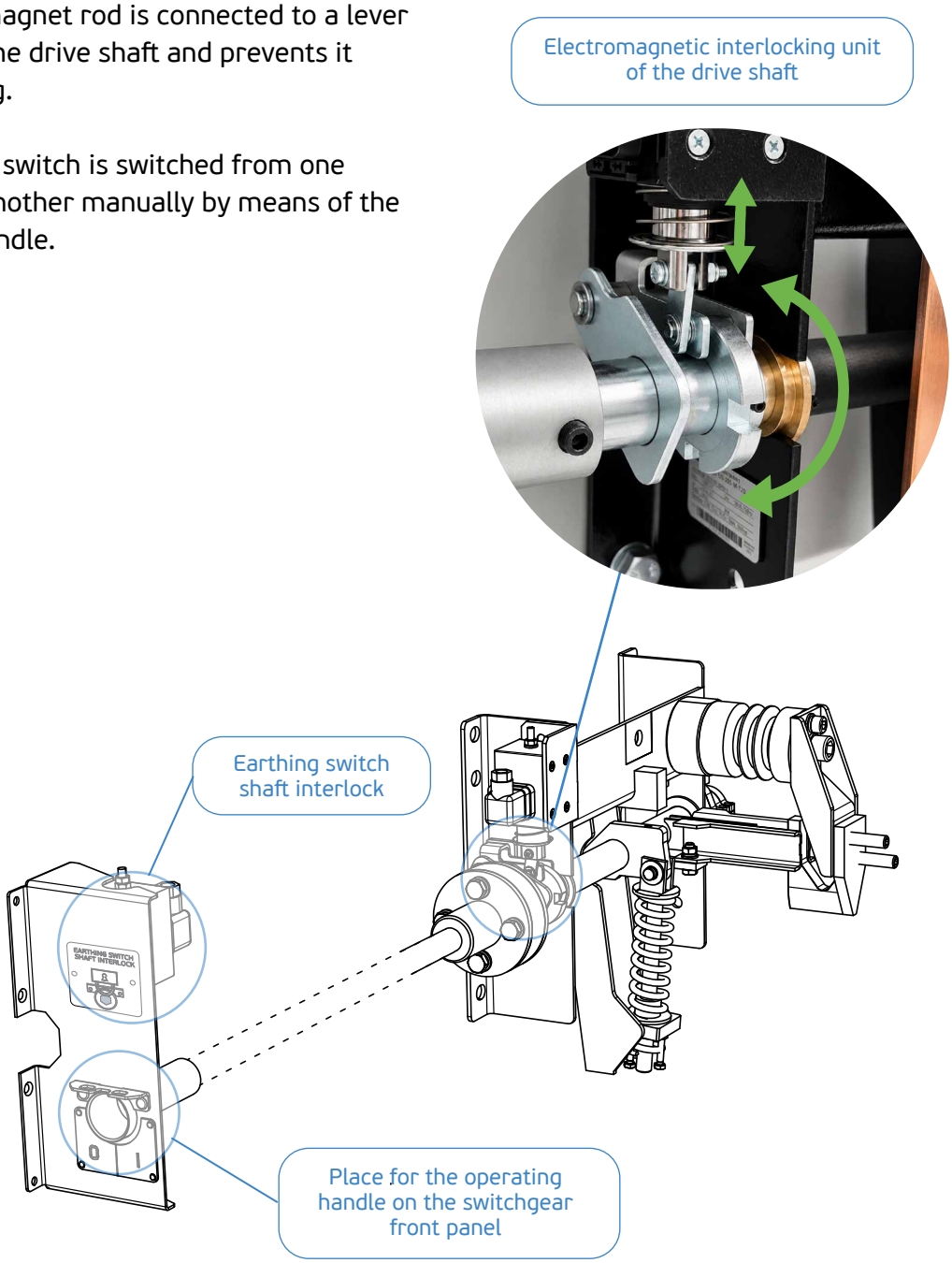

EARTHING SWITCHES TECHNICAL PARAMETERS

Parameter name	Unit	Value	
Number of poles	pc.	1	2
Permissible operating voltage of the main circuit, UNe	V DC	3600	
Insulation voltage, UNm	V DC	4800	
Rated short-circuit current of the network, INss	kA	80	
Peak short-circuit current, ÎNss	kA	115	
Short-time withstand current (250 ms), INcw	kA	80	
Earthing switch category by making capacity	-	V	
Making capacity, ÎNss	kA	125	
Transient resistance of the main circuit (at ambient temperature of plus 20 °C)	μΩ	30	
Overvoltage category acc. to DSTU EN 50124-1:2018	-	OV3	
Pollution degree acc. to DSTU EN 50124-1:2018	-	PD3	
Insulating materials (group in accordance with DSTU EN 50124-1:2018)	-	II 400 < CTI < 600	
Number of the earthing switch position auxiliary contacts	-	4 NO/4 NC	
Manual drive of the earthing switch	-	Handle	
Interlocking magnet	-	Yes	
Rated voltage supply of the interlocking magnet	V DC	110/220	
Switching endurance of the earthing switch	operations	5 000	
Degree of the earthing switch protection acc. to DSTU IEC 60529:2018	-	IP00	
Overall dimensions of the earthing switch (H x W x D)	mm	520 x 380 x 316	
Weight	kg	19	25
Operating temperature range	°C	from –5.0 to +40	

Earthing Switch

Making capacity, kA

Rated operating voltage, kV

ES - 125 - 3,3 - XP

Type of earthing switch acc.to number of poles

2P	Double-pole
1P	Single-pole

OVERALL DIMENSIONS

ES-125-3,3-1

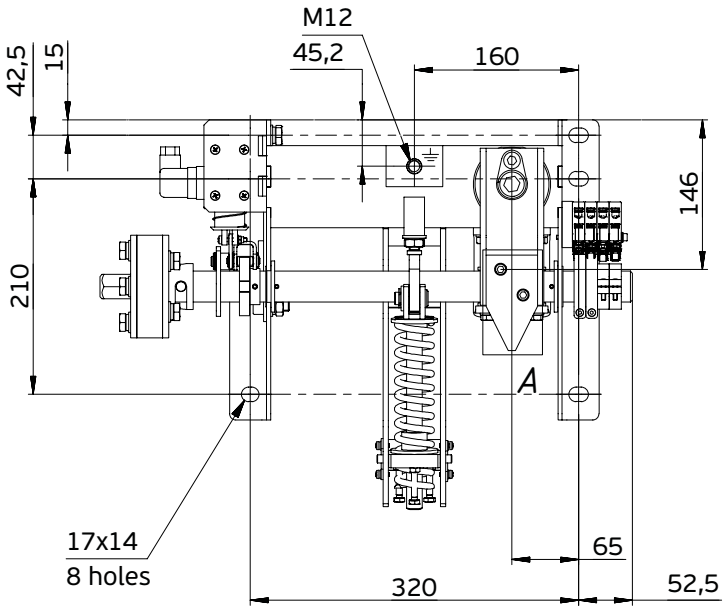

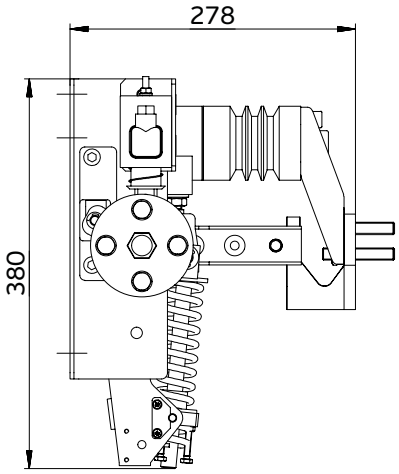

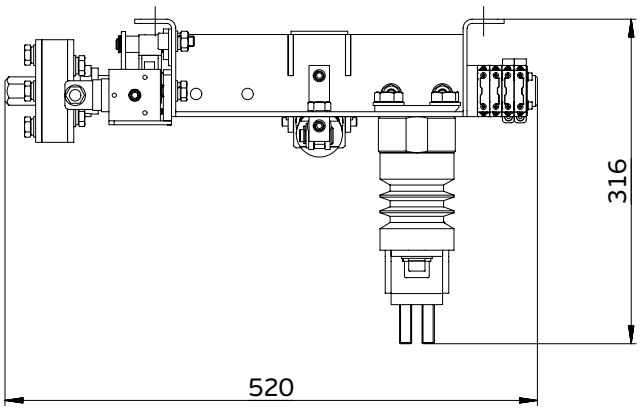

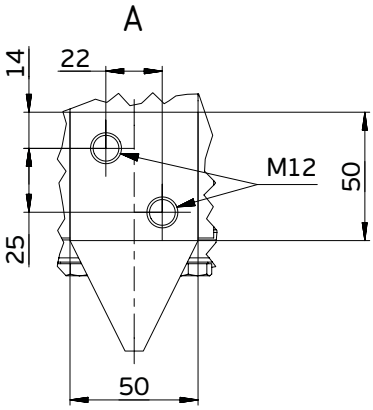

OVERALL DIMENSIONS

ES-125-3,3-2

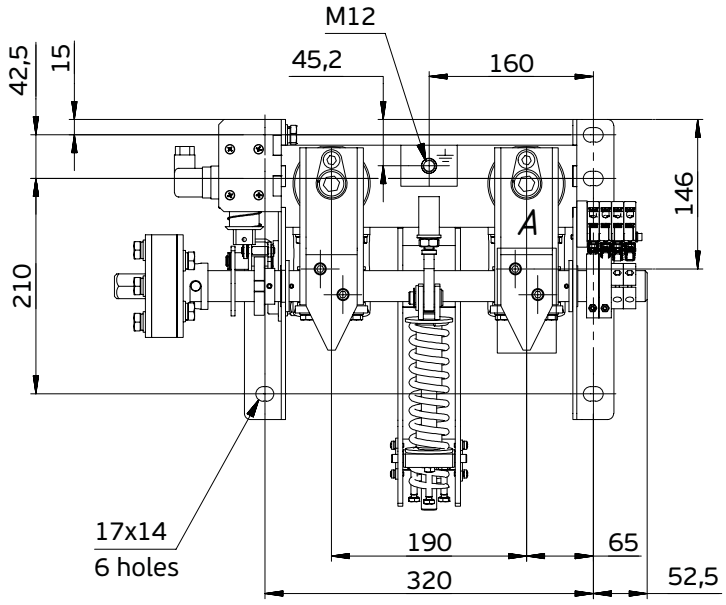

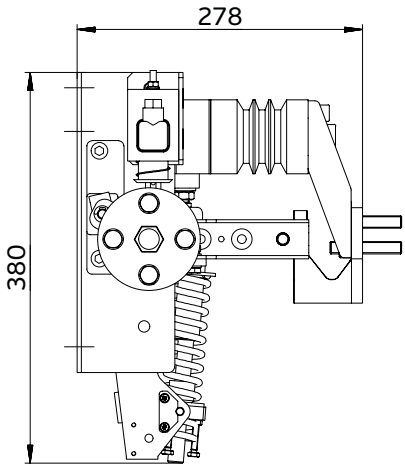

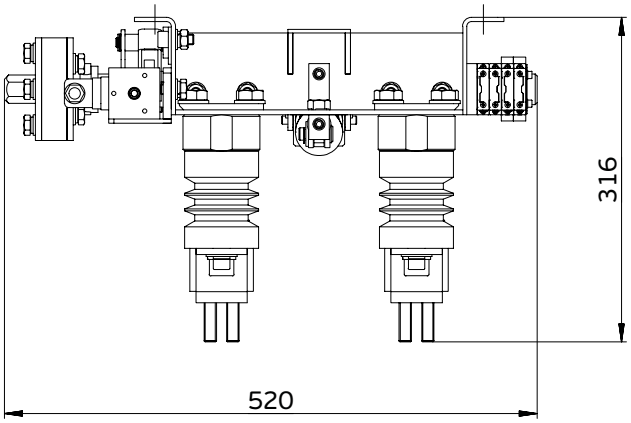

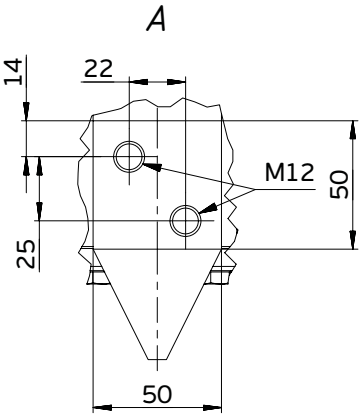

PLUTON Polska
16 Mazura str.
02-830 Warsaw, Poland

Tel./Fax:
+48 22 111 50 31

E-mail: office@pluton-polska.pl
www.pluton-polska.pl

LLC PLUTON IC
4-B Lukasha M. st., office 1
Lviv, 79026 Ukraine

Tel./Fax:
+380 (61) 239-79-00
+380 (61) 239-79-01

E-mail: info@pluton.ua
www.pluton.ua

© 2026. LLC PLUTON IC. All rights reserved

ES-125-3,3_1.0-26-en